100W Single Output Series - with approval

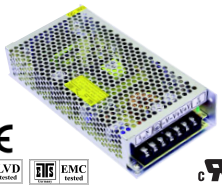

- AC input range selected by switch
- High reliability
- Approvals: UL, ETS/LVD/EMC/ CE
- Protections: over current/ over voltage/ short circuit
- 2 years warranty
- F610 199 x 98 x 39(mm)

AC input voltage range ..... 85~132/ 170~264VAC selected by switch
Input frequency ..... 47~63Hz
Inrush current ..... cold start, 20A/115V, 40A/230V
Input leakage current ..... ＜0.7mA/ 230VAC
Line regulation (full load) ..... ≤±0.5%
Output voltage adjust range ..... ±10%
Output over current protection ..... 110~130%
Output over voltage protection ..... 115~150%
Withstand voltage ..... I/P -O/P: 3.0KVAC/1min
I/P -F/G: 1.5KVAC/1min
O/P-F/G: 0.5KVAC/1min
Rise, Hold up time ..... 50ms, 20ms@full load (typical)
Operating temp. & humidity ..... -10℃~+50℃, 20%~93%RH (non condensing)
Storage temp. & humidity ..... -20℃~+85℃, 20%~95%RH (non condensing)
Safety standards GB4943, UL60950, EN60950
EMC standards ..... GB9254, EN55022 classB, EN55024
EN61000-3-2,3, EN61000-4-2,3,4,5,6,8,11
Cooling method ..... convection

Model	DC Output		Load regul.	R&N	Efficiency
HF100W-SF-5	5V	20.0A	0.5%	100mV	77%
HF100W-SF-7.5	7.5V	13.5A	0.5%	100mV	78%
HF100W-SF-12	12V	8.5A	0.5%	100mV	82%
HF100W-SF-13.8	13.8V	7.5A	0.5%	100mV	82%
HF100W-SF-15	15V	6.7A	0.5%	100mV	82%
HF100W-SF-24	24V	4.5A	0.5%	100mV	83%
HF100W-SF-48	48V	2.2A	0.5%	150mV	84%

* 3~48VDC output all available.

Drawing
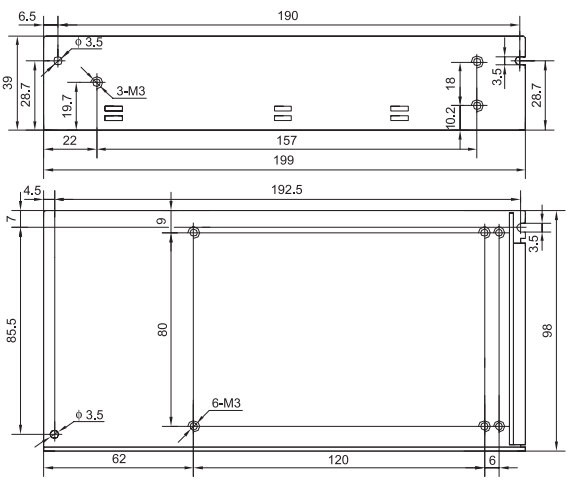
F610